VAUGHAN

Montferrat Chandelier, 3 Lights

CL0349

US Version

Height	18 ¼"
Width	30 ¼"
Depth	30 ¼"
Weight	12 lbs
Material	Brass
Bulb Quantity	x3
Input Voltage	120V
Dimmable	Mains Dimmable

Recommended Shade

Shade Shown	7" Empire
Height with Shade	18 ¼"
Width with Shade	32 ¼"
Depth with Shade	32 ¼"

Finishes

Brass	CL0349.BR.US
Bronze	CL0349.BZ.US
Chalk White	CL0349.IV.US

Bulb Specification

Bulb Base	E12 Candelabra Base
Max Wattage	40W
Bulb Supplied	No
Vaughan Recommends	LED/2700K/500 lm

For a brighter light, a bulb with a higher lumen output can be used.

Further Information

Supplied with 39"of chain. Allowing for a total drop up to 62".

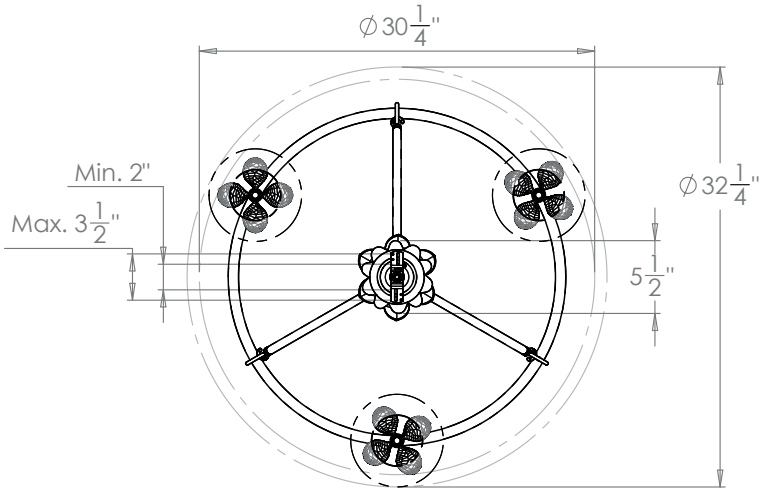

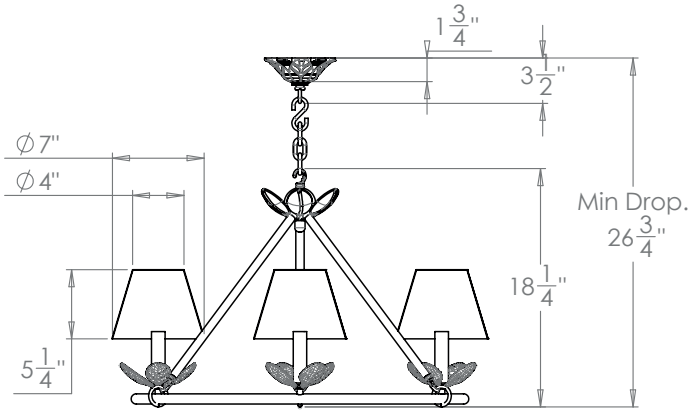

Please Note:- These notes are for guidance only. Vaughan accepts no responsibility for any installation using the above notes. The final decision on installation remains with the installer.